JEE-O slimline wall basin mixer

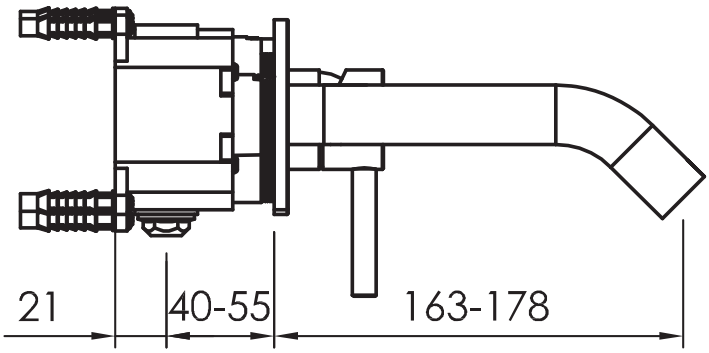

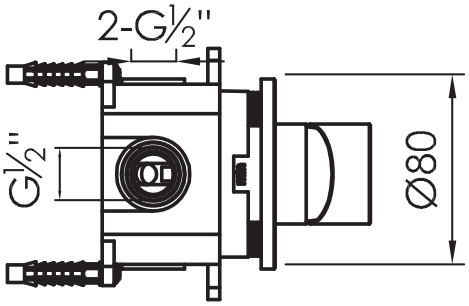

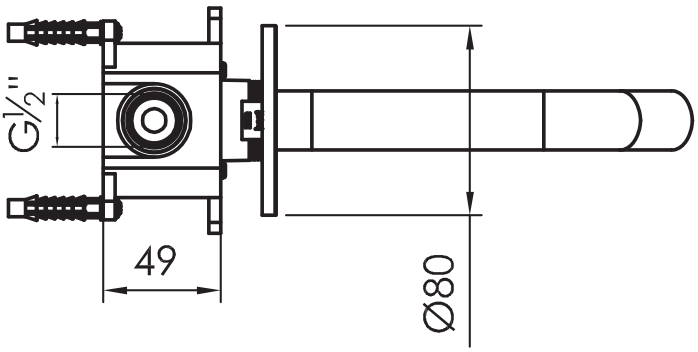



Article code:	800-1500 Brushed 800-1503 Stuctured black 800-1504 PVD coated bronze 800-1505 PVD coated matt gold 800-1509 PVD coated dark steel
Material:	Stainless Steel r304
Cleaning instructions:	download JEE-O shower and taps manual on our website: www.jee-o.com
Cartridge:	Sedal ceramic mixing mechanism (35mm), item code 005-0101
Flow at water of 38°C:	10l p/m at 3Bar pressure
Pressure:	Recommended working pressure 3Bar

Connection: Thread:	2 x G ½" (ø15mm / 0.6") British Standard Pipe (BSP)
Dimension package: Total weight: Package weight:	L 26 x W 27 x H 17cm 2.2 kg 0.82 kg

7 year warranty – The general conditions can be found on our website: www.jee-o.com/downloads

HS code:	84818011900
Approvals:	SLS BS EN 817

Models are subject to change and specs may contain typographical errors
Slight variations in the aesthetic appearance of the product, including the color, may occur after exposure to external influences such as sunlight, pollution or harmful chemicals