JEE-O pure touchless wall basin tap

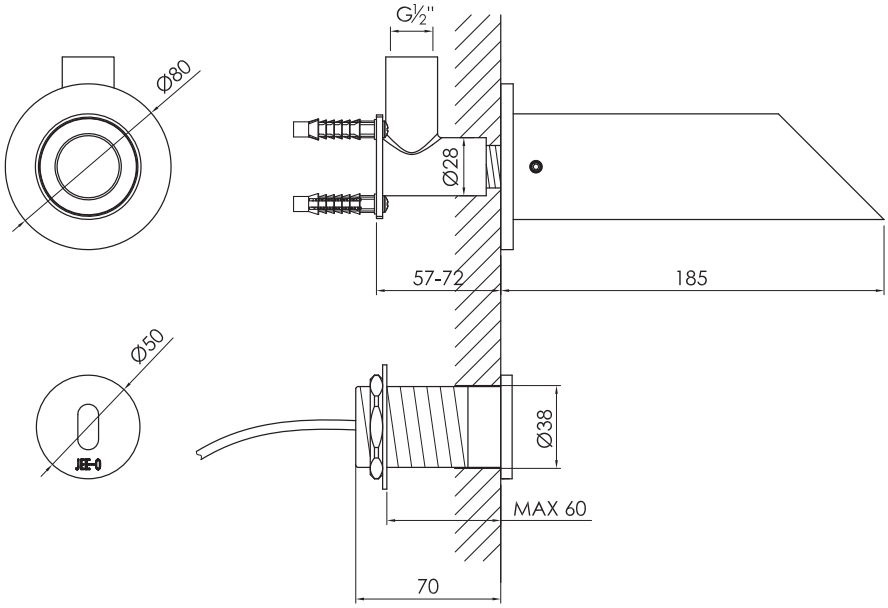

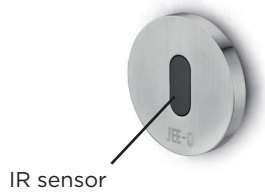



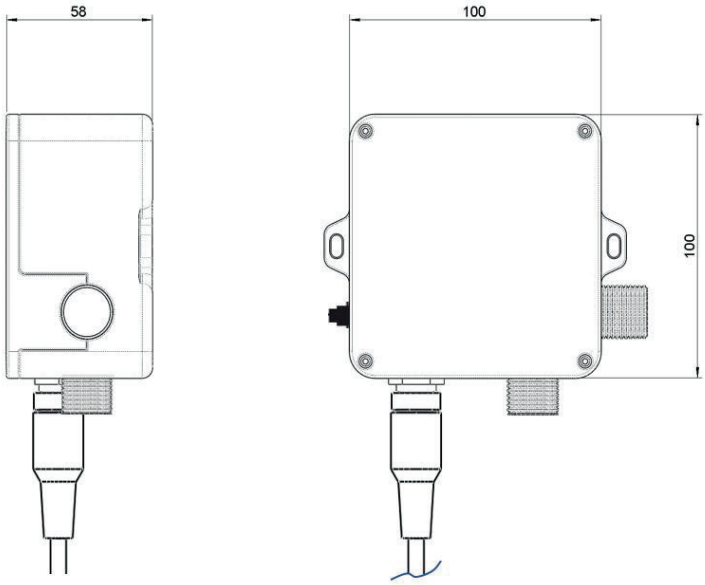





Article code:	300-1530 Brushed 300-1534 PVD coated bronze 300-1535 PVD coated matt gold
Material:	Stainless Steel r304
Cleaning instructions:	download JEE-O shower and taps manual on our website: www.jee-o.com
Cartridge:	sedal ired+ electronic infrared operated valve
Flow at water of 38°C:	10L p/m at 3Bar pressure
Pressure:	Recommended working pressure 3Bar
Sensor (de)activation time:	<1s
Sensor cable:	appr. 120 cm length

Connection:	G ½-14
Thread:	British Standard Pipe (BSP)
Power supply:	DC 6V; AC 230 V (50Hz)/ 110-120V (60Hz)
Power consumption:	standby: AC < 4W ; DC < 0.2mW flushing: AC < 5W ; DC < 3W
Battery type (optional):	4xAA 1.5V
Dimension package:	L 39 x W 31 x H 11 cm
Total weight:	2.6 kg
Package weight:	0.250 kg

Protection against intrusion: valve IP65 and sensor IP67

7 year warranty steel parts and 1 year on electronics

The general terms and conditions can be found on our website: www.jee-o.com/downloads

HS Code:	8481801190
Approvals:	WRAS 2307321 ACS (XP P41-280)

Models are subject to change and specs may contain typographical errors
Slight variations in the aesthetic appearance of the product, including the color, may occur after exposure to external influences such as sunlight, pollution or harmful chemicals