IMPERIAL
Bringing Bathrooms to Life, For Life

Classical Brassware Collection	
Edwardian	1/2” basin pillar taps

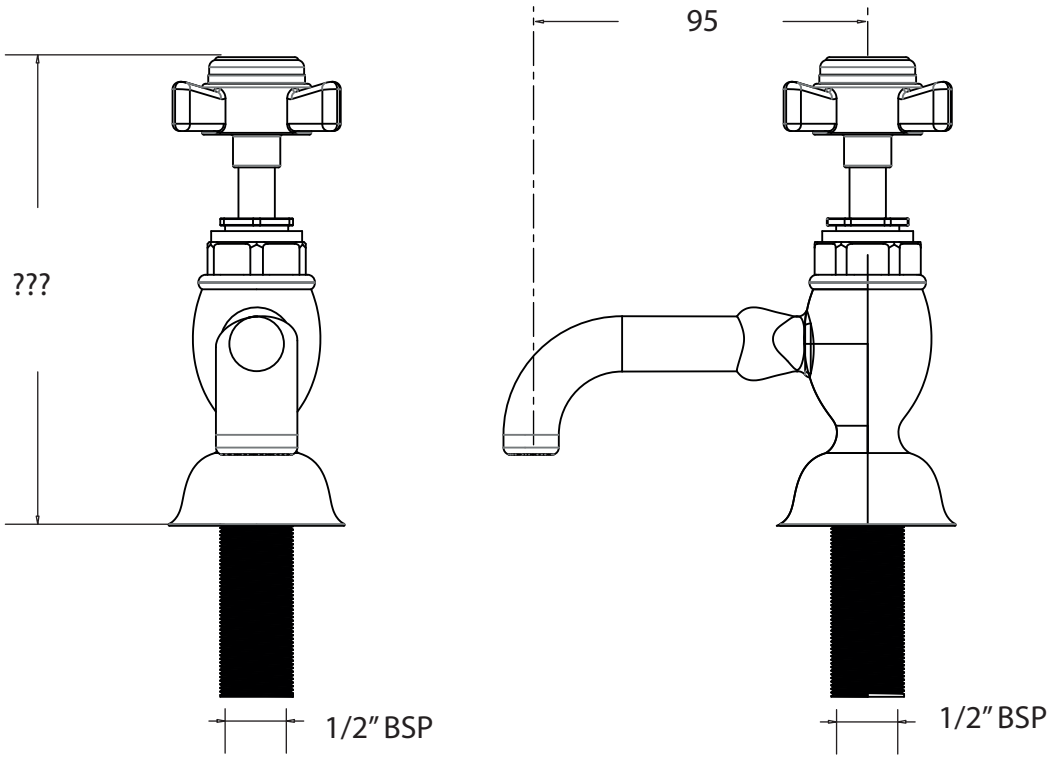

We recommend that all products are purchased with the assistance of a specialist bathroom retailer and always installed by an ex perienced installer who is a member of a recognized association. All sizes quoted are nominal: items may vary by plus or minus 2% against the figures quoted. When planning installations where dimensions are critical, it is essential that the space allowed for individual items is physically checked. Imperial Bathrooms can not be held liable for any costs associated with items not fitting in any given area. The contents of this statement are based on information correct at the ti me of publication. We reserve the right to make alterations and changes in product characteristics, fixin g, packaging, operation etc at any time without notice.

For further information on fitting guidelines, Terms and Conditions and Warrantee details, please refer to the back of the 2008 Design Guide or contact Imperial’s Customer Service team on 0870 60 61 62 3 or sales@imperial-bathrooms.co.uk